# GYMNASIUM

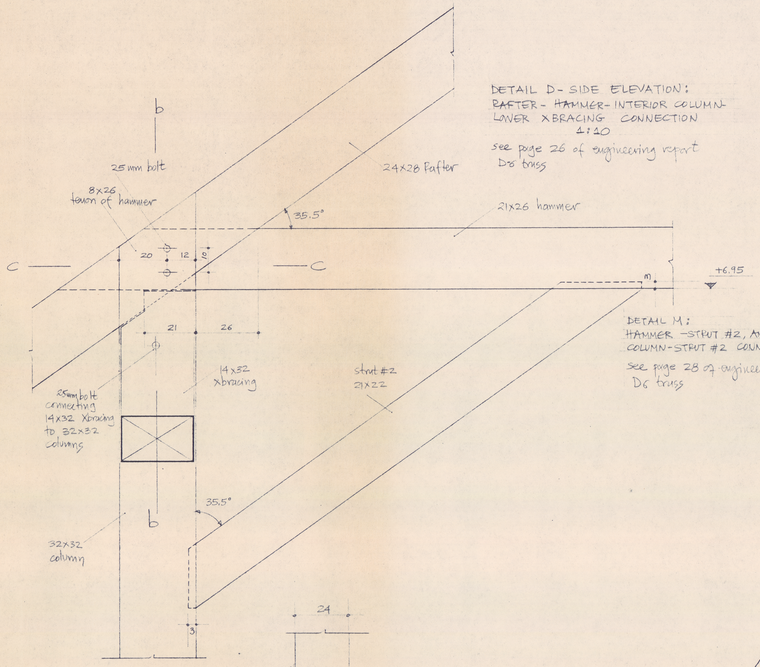


DETAIL D- SIDE ELEVATION:
RAFTER- HAMMER- INTERIOR COLUMN-
LOWER XBRACING CONNECTION
1:10
see page 26 of engineering report
D6 truss

DETAIL M:
HAMMER -STRUT #2, AND
COLUMN-STRUT #2 CONNECTION
see page 28 of engineering report
D6 truss

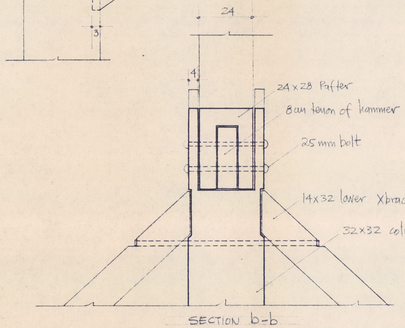


SECTION b-b

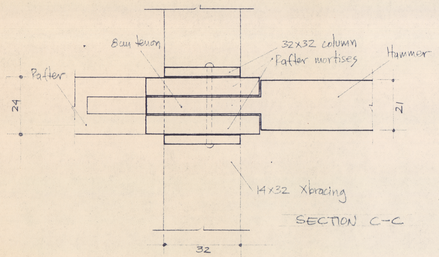


SECTION C-C

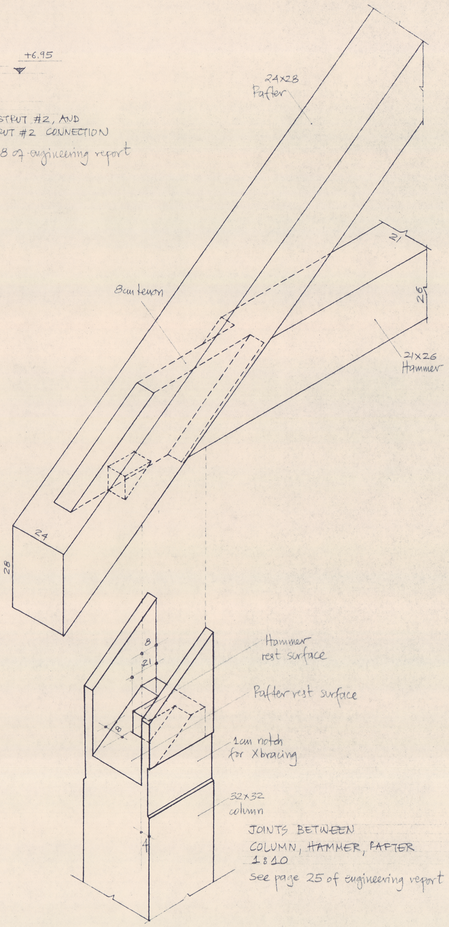


JOINTS BETWEEN
COLUMN, HAMMER, RAFTER
1:10
See page 25 of engineering report

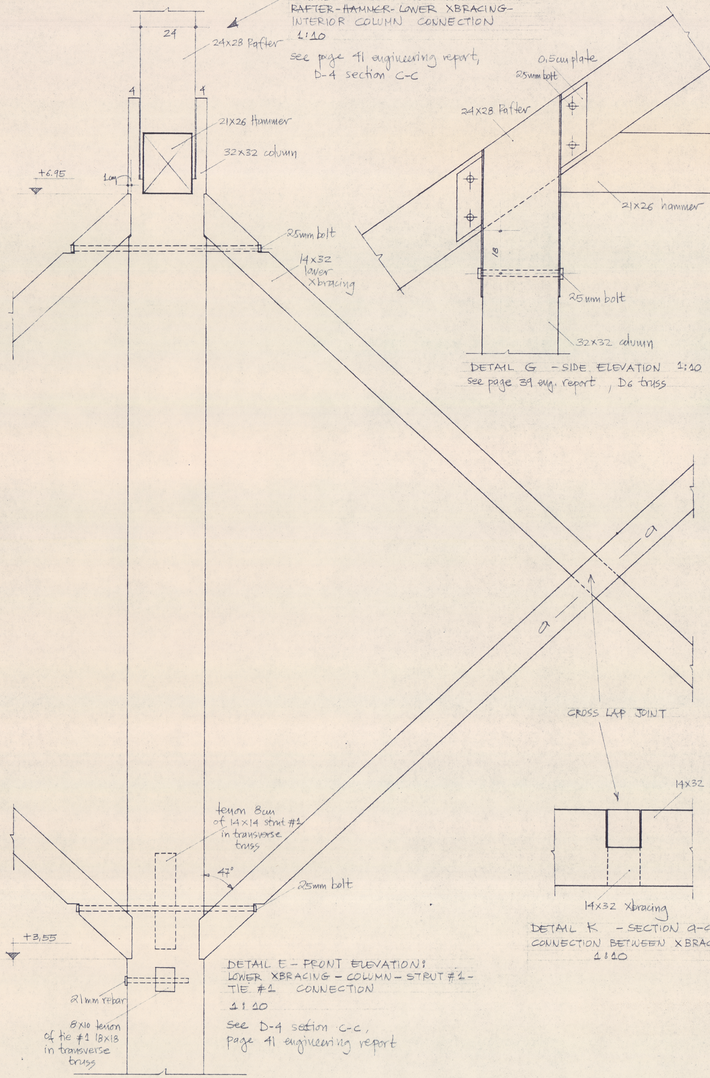


DETAIL D-FRONT ELEVATION:
RAFTER-HAMMER- LOWER XBRACING-
INTERIOR COLUMN CONNECTION
1:10
see page 41 engineering report,
D-4 section C-C

DETAIL E - FRONT ELEVATION:
LOWER XBRACING - COLUMN - STRUT #1 -
TIE #1 CONNECTION
1:10
See D-4 section C-C,
page 41 engineering report

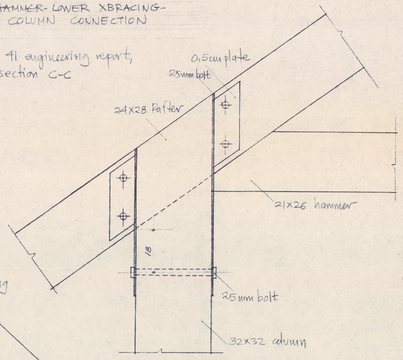


DETAIL G - SIDE ELEVATION 1:10
see page 39 eng. report, D6 truss




DETAIL K - SECTION a-a:
CONNECTION BETWEEN XBRACINGS
1:10

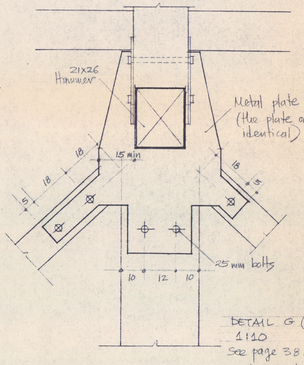


DETAIL G (VERSION OF DETAIL D)
1:10
See page 38 of engineering report,
D4 section CC

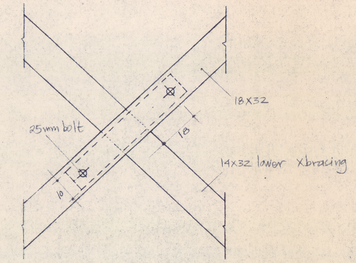


DETAIL H:
CONNECTION BETWEEN XBRACINGS
CROSS LAP JOINT, METAL PLATE ON THE BACK
1:10
See page 40 engineering report,
D4 section c-c

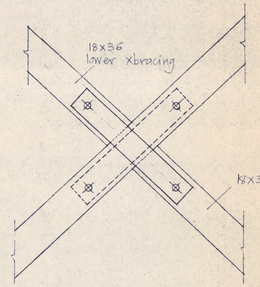


DETAIL L: CONNECTION BETWEEN X-BRACINGS,
CROSS-LAP JOINT, TWO METAL PLATES - ONE ON THE FRONT
AND ONE ON THE BACK
see page 40 eng report, D4 section c-c

**CENTER FOR ENVIRONMENTAL STRUCTURE**
ARCHITECTS AND CONTRACTORS BERKELEY, CALIFORNIA

| EISHIN PROJECT TOKYO JAPAN | BUILDING No 25 | SHEET No 7 | DATE 1.4.84 |
|---|---|---|---|