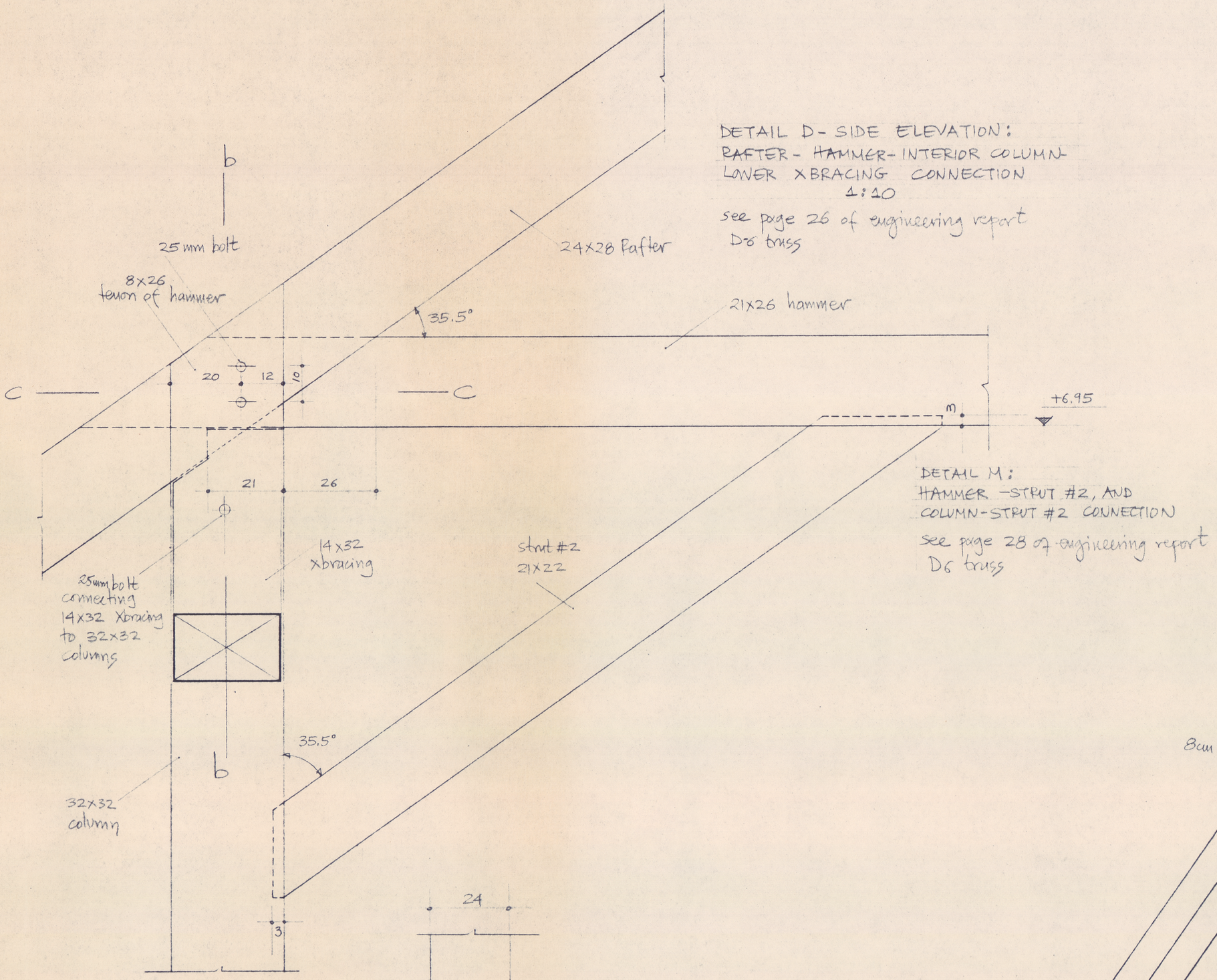

DETAIL D - SIDE ELEVATION:
RAFTER - HAMMER - INTERIOR COLUMN -
LOWER XBRACING CONNECTION
1:10
see page 26 of engineering report
D6 truss

DETAIL M:
HAMMER - STRUT #2, AND
COLUMN - STRUT #2 CONNECTION
see page 28 of engineering report
D6 truss

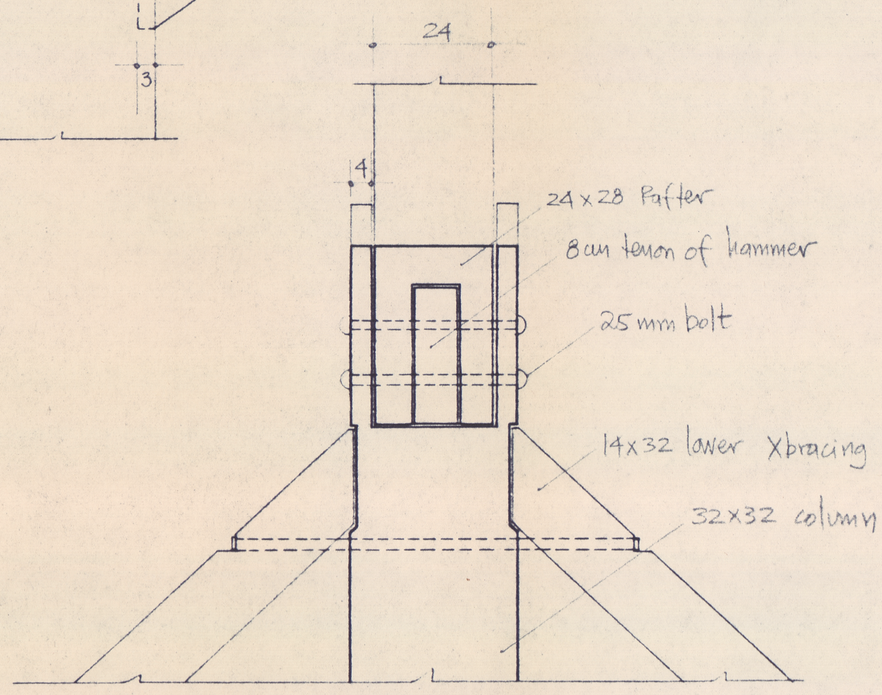

SECTION b-b

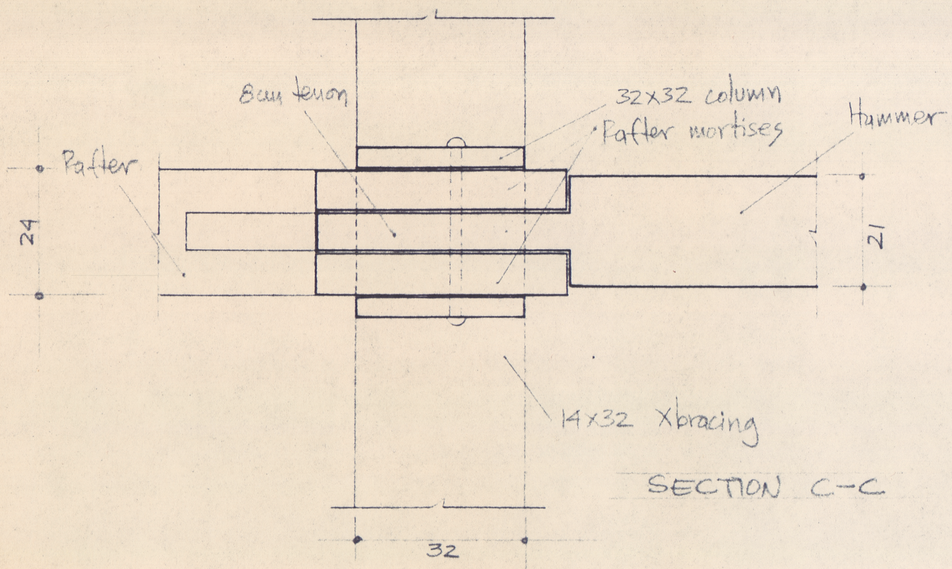

SECTION C-C

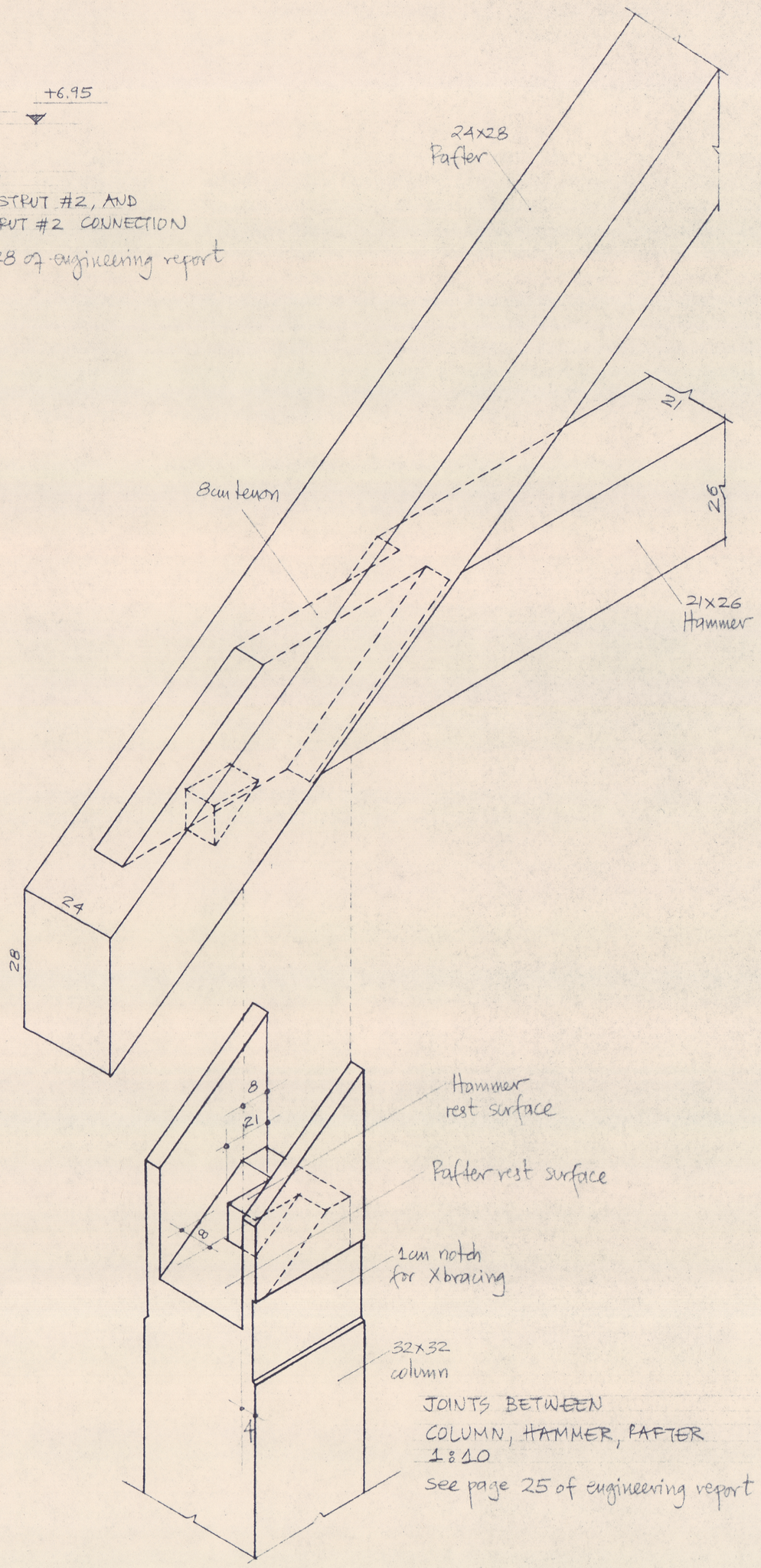

JOINTS BETWEEN
COLUMN, HAMMER, RAFTER
1:10
see page 25 of engineering report